EJECTOR HEADER SMT

3311 SERIES - 2.54MM PITCH

HSF RoHS

Specifications

- Current rating: 3.0 Amps
- Contact resistance: 20mΩ max
- Withstand voltage: 1000V AC/DC
- Insulation resistance: 1000MΩ min
- Operation temperature: -40°C to +105°C
- Contact material: Brass
- Contact plating: Au Or Sn Over Ni
- Insulator material: Polyester (UL94V-0)

- Standard: PBT
- Max. processing Temp: 230°C for 30-60 seconds
  260°C for 10 seconds

Ordering Information

3311S - XX A B - G L 01
(1 2 3 4 5 6)

1. **Connector Series**
2. **Number of pins**
3. **Contact Plating**
   - **A**=Gold Flash
   - **B**=3U" Gold
   - **C**=5U" Gold
   - **D**=10U" Gold
   - **E**=15U" Gold
   - **F**= 30U" Gold
   - **G**=Gold Flash/Tin
   - **H**= Tin
4. **Insulator Material Option**
   - **A** = BK-PBT
   - **B** = BK-PA66
   - **C**= BK-PA6T
   - **D**=BK-PA46
   - **E**=BK-PA9T
   - **F**=BK-LCP
5. **Color Type**
   - **B** = Black
   - **G**= Grey
6. **Latch Type**
   - **L** = Long latch
   - **S** = Short latch
   - **Ø**= Without latch

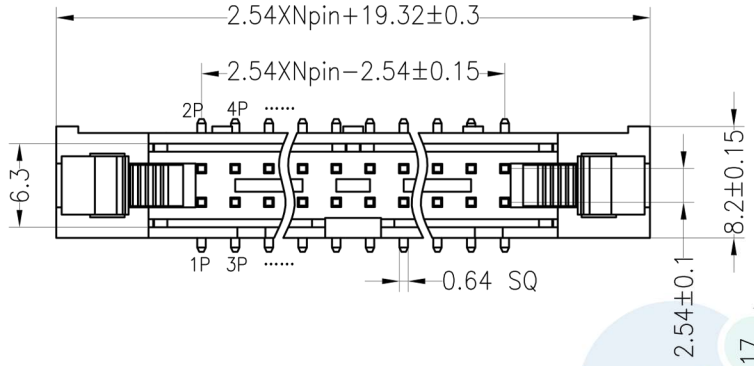

Recommended P.C.B Layout(Top Side)
(PCB BOARD TOLERANCE±0.05)

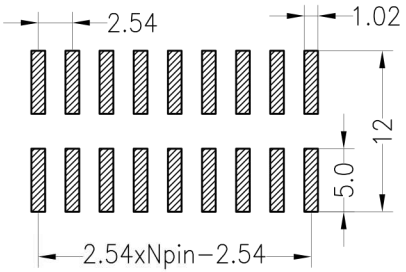

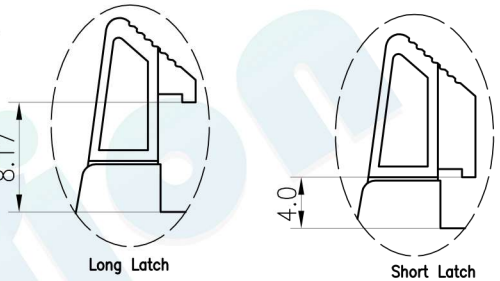

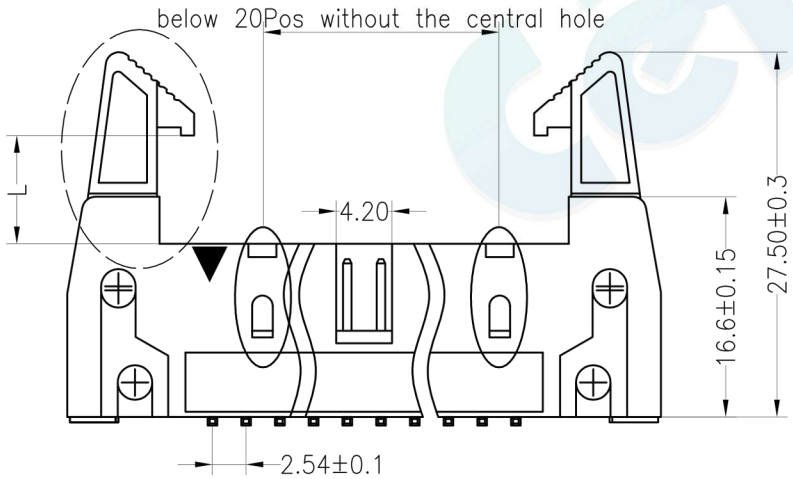

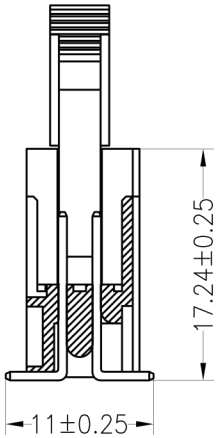

REV	DATE	MODIFICATION DESCRIPTION	CHANGE
A0	2012.04.18	NEW DRAWING	

OPERATION	
X.X	±0.30
X.XX	±0.20
X.XXX	±0.10
Angle	±3°
DIM	TOL

DRAW	BEN	12.04.18
CHECK		
APPROVE		

SCALE	FIT
UNIT	mm
SIZE	A4
SHEET	1/1
PROJ.	

Celion
votre partenaire en électronique

PART NO.	3311S-XXXX-XX 01
TITLE:	2.54 ejector header Npin SMT